BRAVO 4.0

MANUAL / LTC (LUBRICATE TIME CONTROL)

INNOVATIVE DESIGN AND SOLUTIONS

DropsA

Lubrication Systems Specialists

www.dropsa.com

BRAVO 4.0

MANUAL / LTC (LUBRICATE TIME CONTROL)

INNOVATIVE DESIGN AND SOLUTIONS

The **Bravo 4.0** electric pump is a robust and compact piston pump, designed for progressive grease and oil lubrication of machinery used in various sectors.

This pump has been developed to meet the wide range of space-related application needs, therefore there is provision for integrating tanks of different capacities as required.
The tank is made of plastic (PET) and has mounting holes that reduce the possibility of lubricant leakage to zero, as well as other features that make it easy to install. The pump is available in 2 macro-versions, which can be used with grease, oil and follower plate:

- **MANUAL**: it can be managed by PLC and external connectors; as it is not equipped with an internal control unit, this version is a cost-effective solution for lubricating your equipment.
- **LTC**: with DIP-switch configurable electronic board; this version is equipped with LEDs indicating cycle status and alarms.

APPLICATIONS

- Wind turbines
- Glass or woodworking, earthmoving and agriculture machinery
- Mining or construction industry, chains and gears

ADVANTAGES

- It is designed to operate with up to three pumps, for an overall higher flow rate.
- A remote reset button for LTC versions can be supplied as optional.
- The main body of the pump is made from high performance robust plastic and is compact in size designed to withstand tough environments.

CHARACTERISTICS

NEW TANK DESIGN

VOLTAGE:
12 VDC - 24 VDC
110 VAC - 230 VAC
50 / 60 HZ

FLOW RATE:
0.14 CM³ / REV. (0.0085 IN³ / REV.)
ADJUSTABLE - 0.02 ÷ 0.13 CM³ / REV. (0.0012 - 0.0079 IN³ / REV.)
0.19 CM³ / REV. (0.0116 IN³ / REV.)
ADJUSTABLE - 0.03 ÷ 0.2 CM³ / REV. (0.0018 - 0.0122 IN³ / REV.)

BRACKET FOR MOUNTING ON WIND TURBINES

MONITORING OF LUBRICANT LEVEL

DEGREE OF PROTECTION:
P69K (DIN 72585 / UTS VERSION)
IP67 (M12 VERSION)
IP65 (DIN 43650 / MPM 203 VERSION)

GENERAL TECHNICAL CHARACTERISTICS						
POWER SUPPLY VOLTAGE	DC		AC - 50 Hz		AC - 60 Hz	
	12 V	24 V	110 V	230 V	110 V	230 V
RATED CURRENT CONSUMPTION	1.5 A	0.7 A	0.3 A	0.2 A	0.3 A	0.2 A
NUMBER OF OUTPUTS (PUMP ELEMENTS)	1 (3 MAX.)					
DELIVERY THREAD (PUMP ELEMENT OUTLET)	G1/4"					
RATED FLOW RATE PER SINGLE OUTLET (PUMPING ELEMENT) (25 RPM)	0.14 CM³ / REV. (0.0085 IN³ / REV.) ADJUSTABLE - 0.02 ÷ 0.13 CM³ / REV. (0.0012 - 0.0079 IN³ / REV.) 0.19 CM³ / REV. (0.0116 IN³ / REV.) ADJUSTABLE - 0.03 ÷ 0.2 CM³ / REV. (0.0018 - 0.0122 IN³ / REV.)					
MAXIMUM WORKING PRESSURE	350 BAR (5076 PSI)					
TANK CAPACITY OIL / GREASE VERSIONS	2 – 4 – 6 – 10 – 14 L (0.53 – 1.06 – 1.59 – 2.64 – 3.7 GALLONS US)					
TANK CAPACITY GREASE VERSIONS W/ FOLLOWER PLATE	2 – 4 – 8 – 12 KG (0.53 – 1.06 – 2.11 – 3.17 GALLONS US)					
MIN. / MAX. GREASE CONSISTENCY	NLGI 000 / NLGI 2					
MIN. OIL VISCOSITY	46 CST AT AMBIENT TEMPERATURE					
OPERATING TEMPERATURE	-25 °C ÷ +80 °C					
STORAGE TEMPERATURE	-30 °C ÷ +90 °C					
MAX. R.H. WITHOUT CONDENSATION DURING OPERATION	90%					
DEGREE OF PROTECTION	IP69K (DIN 72585 / UTS VERSION) IP67 (M12 VERSION) IP65 (DIN 43650 / MPM 203 VERSION)					
SOUND PRESSURE LEVEL	< 70 DB (A)					

DESIGN AND NEW PERFORMANCE COMPARED TO THE BRAVO VERSION

BRAVO 4.0

BRAVO

IP PROTECTION	IP69K (DIN 72585 / UTS VERSION) IP67 (M12 VERSION) IP65 (DIN 43650 / MPM 203 VERSION)	IP65 (IP69K WITH SPECIAL EQUIPMENT)
CONTINUOUS LEVEL MONITORING	✓	✗
OPTICAL LEVEL IO-LINK / DIGITAL (OPTIONAL)	✓	✗
WIRING SET-UP	BOTH SIDES + CUSTOMISABLE PLATE	RIGHT ONLY
MAXIMUM FLOW RATE (CC / REV.)	0.19 CC / REV. × 3 PUMP ELEMENTS = 0.57 CC / REV.	0.19 CC / REV. × 3 PUMP ELEMENTS = 0.57 CC / REV.
MAXIMUM PRESSURE (BAR)	350	280
VENT VALVE SUPPORT	✓	✗
PUMPING ELEMENTS	SCREWED INTO THE HOUSING	SCREWED INTO THE NUT
FIXING HOLES	DOUBLE SLOT FOR GREATER COMPATIBILITY	ONLY 1 FIXING HOLE
CYCLE BUTTON (LTC ONLY)	✓	✗

EXAMPLE OF LUBRICATION SYSTEM ON WIND TURBINES

The **Bravo 4.0** pump is the optimal solution for installation on wind turbines and many types of vehicles such as: earthmoving machinery, agricultural machinery and other special vehicles.

The complete lubrication system includes:

- BRAVO 4.0 pump
- Distributors
- Remote status indication with control button

The wind turbine-mounted version has an upper bracket and an additional lower bracket to increase strength and the number of fixing points.

The tank contains the spring with the plate disc, so that the pump can also operate upside down.

The follower plate disc is flat, so that the optical level can read the precise position and detect the amount of residual grease.

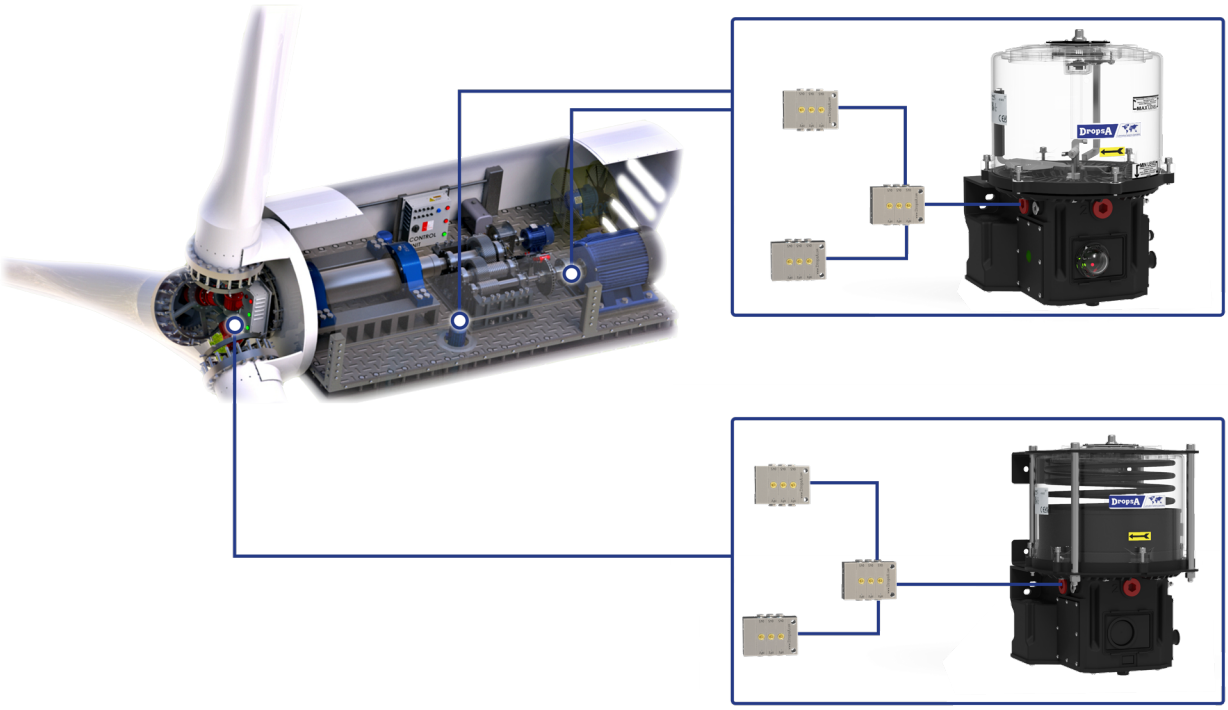

OVERALL DIMENSIONS

VERSIONS
GREASE / FOLLOWER PLATE

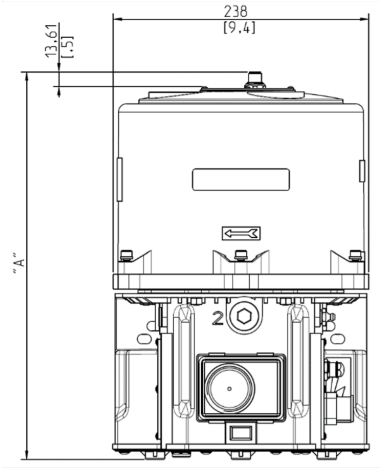

VERSION
WITH BRACKETS

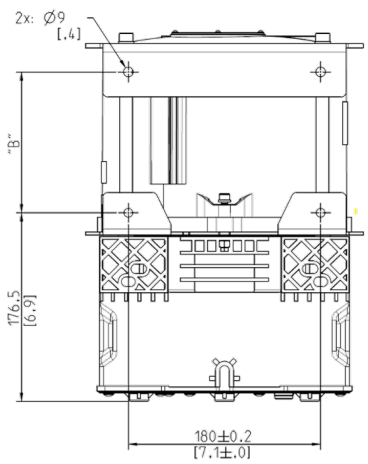

OIL VERSION

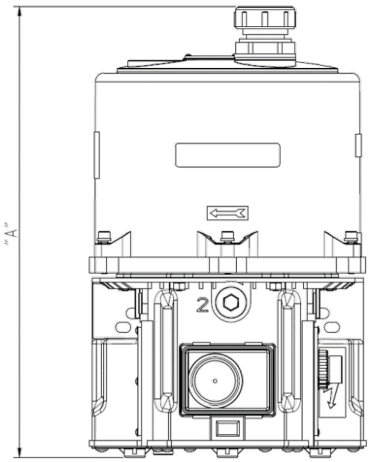

GREASE TANK	VALUE 'A'	GREASE TANK WITH FOLLOWER PLATE	VALUE 'A'	VALUE 'B'	OIL TANK	VALUE 'A'
2 KG	257 (N.A.)	2 KG	347 (361)	132	2 KG	303
4 KG	347 (361)	4 KG	397 (411)	182	4 KG	393
6 KG	397 (411)	8 KG	499 (513)	284	6 KG	443
10 KG	499 (513)	12 KG	604 (618)	389	10 KG	545
14 KG	604 (618)	-	-	-	14 KG	650

Note (xxx) = with optical level
Flanges are provided for the 10 kg and 14 kg versions, both grease and oil versions.

* FOR PUMP FASTENING USE:	
SCREWS	M8 (8.8)
NUTS	M8 (8.8)
WASHERS	8
TIGHTENING TORQUE	18 N M + / - 1.0 N M

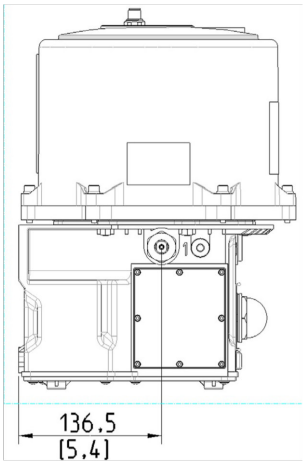

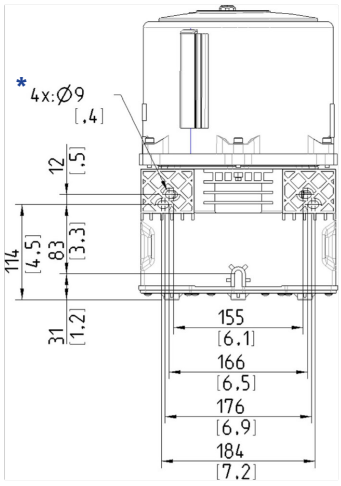

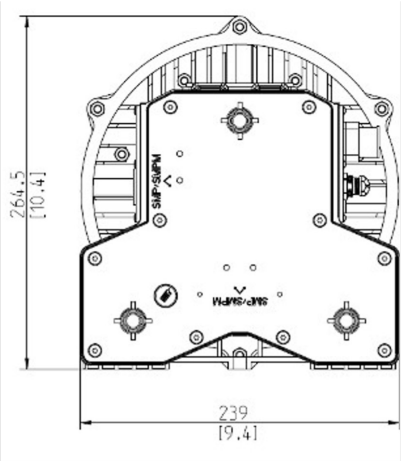

C2411PE - WK 42/26

DropsA
Lubrication Systems Specialists

GREASE VERSION WITH FOLLOWER PLATE

Tank sizes available
(2 - 4 - 8 - 12 Kg)

Minimum
level sensor

OIL VERSION

Loading plug

Tank sizes available
(2 - 4 - 6 - 10 - 14 Kg)

Auxiliary return
to pomp port
G1/8"

GREASE VERSION

Grease breaker

Minimum flag
detachment level

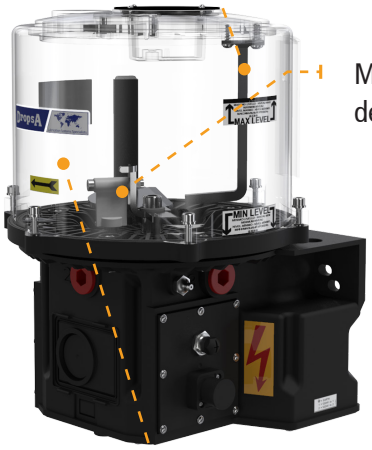

Tank sizes available
(2 - 4 - 6 - 10 - 14 Kg)

LTC ELECTRONICS / LEVEL SENSOR (VALID FOR ALL VERSIONS)

IO-Link / digital
optical level
connector (optional)

Viewing window
/ configuration status

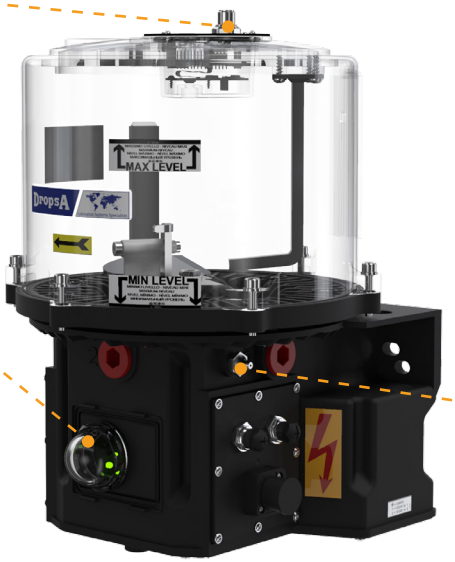

Extra
cycle button

Filling grease
nipple holder

DropsA
Lubrication Systems Specialists

ORDERING INFORMATION

The pump can be configured according to customer requirements.
The ordering code is derived from the above-mentioned identification string divided into two sections:

Product ID code = Product type identifier (**Bravo 4.0**)
Ordering options = Available product configuration options.

PRODUCT ID CODE			ORDERING OPTIONS			
8	8	3	X	X	X	X

TANK CAPACITY

GREASE	2 KG	0 (*)
	4 KG	1
	6 KG	2
	10 KG	3
	14 KG	4
GREASE WITH FOLLOWER PLATE	2 KG	5
	4 KG	6
	8 KG	7
	12 KG	8
OIL	2 KG	A (*)
	4 KG	B
	6 KG	C
	10 KG	D
	14 KG	E
(*) OPTICAL LEVEL NOT AVAILABLE		

ELECTRICAL CONNECTION

FOR MANUAL VERSION	1X MPM + 1X M12 4 PIN R SIDE (1) (2)	00
	1X MPM + 1X M12 4 PIN L SIDE (2)	01
	2X MPM R SIDE (1) (2)	02
	2X MPM L SIDE (2)	03
	AMP 7 PIN IP69K R SIDE (1) (3)	04
	AMP 7 PIN IP69K L SIDE (3)	05
FOR LTC VERSION	AMP 7 PIN + 1X M12 4 PIN R SIDE (1) (3)	50
	AMP 7 PIN + 1X M12 4 PIN L SIDE (3)	51
	AMP 7 PIN IP69K R SIDE (1) (3)	52
	AMP 7 PIN IP69K L SIDE (3)	53
	1X MPM + 2X M12 5 PIN R SIDE (1) (2)	54
	1X MPM + 2X M12 5 PIN L SIDE (2)	55
(1) STD VERSION		(1)
(2) AVAILABLE FOR 12 / 24 VDC 110 / 230 VAC		(2)
(3) ONLY AVAILABLE FOR 12 / 24 VDC		(3)

POWER SUPPLY

MANUAL WITHOUT OPTICAL LEVEL	12 VDC	0
	24 VDC	1
	110 / 220 V 50 / 60 HZ	2
MANUAL (*) FOR OPTICAL LEVEL	12 VDC	E
	24 VDC	F
	110 / 220 V 50 / 60 HZ	G
LTC WITHOUT OPTICAL LEVEL	12 VDC	3
	24 VDC	4
	110 / 220 V 50 / 60 HZ	5
LTC (*) FOR OPTICAL LEVEL	12 VDC	H
	24 VDC	I
	110 / 220 V 50 / 60 HZ	L
(*) FOR OPTICAL LEVEL SEE ACCESSORIES FIGURATION		

OPTIONAL ACCESSORIES

PUMPING UNIT POSITIONING									OPTICAL LEVEL	CUSTOMISED LABEL
OUTLET 1			OUTLET 2			OUTLET 3				
X			X			X			X	X
DIGIT	OUTLET VERSION	SAFETY VALVE	DIGIT	OUTLET VERSION	SAFETY VALVE	DIGIT	OUTLET VERSION	SAFETY VALVE		
0	NOT PRESENT	NO	0	NOT PRESENT	NO	0	NOT PRESENT	NO		
1	0.14 CC / REV.	NO	1	0.14 CC / REV.	NO	1	0.14 CC / REV.	NO		
2	ADJ. 0.02 - 0.13 CC / REV.	NO	2	ADJ. 0.02 - 0.13 CC / REV.	NO	2	ADJ. 0.02 - 0.13 CC / REV.	NO		
3	0.19 CC / REV.	NO	3	0.19 CC / REV.	NO	3	0.19 CC / REV.	NO		
4	ADJ. 0.03 - 0.2 CC / REV.	NO	4	ADJ. 0.03 - 0.2 CC / REV.	NO	4	ADJ. 0.03 - 0.2 CC / REV.	NO		
5	0.14 CC / REV.	280 BAR FRONT GREASE NIPPLE	5	0.14 CC / REV.	280 BAR LEFT OUTLET	5	-	-		
6	ADJ. 0.02 - 0.13 CC / REV.	280 BAR	6	ADJ. 0.02 - 0.13 CC / REV.	280 BAR	6	ADJ. 0.02 - 0.13 CC / REV.	280 BAR		
7	0.19 CC / REV.	280 BAR FRONT GREASE NIPPLE	7	0.19 CC / REV.	280 BAR LEFT OUTLET	7	-	-		
8	ADJ. 0.03 - 0.2 CC / REV.	280 BAR	8	ADJ. 0.03 - 0.2 CC / REV.	280 BAR	8	ADJ. 0.03 - 0.2 CC / REV.	280 BAR		
9	0.14 CC / REV.	350 BAR FRONT GREASE NIPPLE	9	0.14 CC / REV.	350 BAR LEFT OUTLET	9	-	-		
A	ADJ. 0.02 - 0.13 CC / REV.	350 BAR	A	ADJ. 0.02 - 0.13 CC / REV.	350 BAR	A	ADJ. 0.02 - 0.13 CC / REV.	350 BAR		
B	0.19 CC / REV.	350 BAR FRONT GREASE NIPPLE	B	0.19 CC / REV.	350 BAR LEFT OUTLET	B	-	-		
C	ADJ. 0.03 - 0.2 CC / REV.	350 BAR	C	ADJ. 0.03 - 0.2 CC / REV.	350 BAR	C	ADJ. 0.03 - 0.2 CC / REV.	350 BAR		
D	STRAIGHT FILLING CONNECTOR	-	D	STRAIGHT FILLING CONNECTOR	-	D	STRAIGHT FILLING CONNECTOR	-		
E	0.14 CC / REV.	280 BAR	E	0.14 CC / REV.	280 BAR	E	0.14 CC / REV.	280 BAR		
F	0.19 CC / REV.	280 BAR	F	0.19 CC / REV.	280 BAR	F	0.19 CC / REV.	280 BAR		
G	0.14 CC / REV.	350 BAR	G	0.14 CC / REV.	350 BAR	G	0.14 CC / REV.	350 BAR		
H	0.19 CC / REV.	350 BAR	H	0.19 CC / REV.	350 BAR	H	0.19 CC / REV.	350 BAR		
I	-	-	I	0.14 CC / REV.	280 BAR RIGHT OUTLET	I	0.14 CC / REV.	280 BAR FRONT GREASE NIPPLE		
L	-	-	L	0.19 CC / REV.		L	0.19 CC / REV.			
M	-	-	M	0.14 CC / REV.	350 BAR RIGHT OUTLET	M	0.14 CC / REV.	350 BAR FRONT GREASE NIPPLE		
N	-	-	N	0.19 CC / REV.		N	0.19 CC / REV.			
O	90° FILLING CONNECTOR	-	O	90° FILLING CONNECTOR	-	O	90° FILLING CONNECTOR	-		

DIGIT	OPTICAL LEVEL
0	NOT PRESENT N / P
1	I/O LINK
2	DIGIT

DIGIT	LABEL
0	DROPSA

Order example:

883 0 0 0 0 - 1 2 L 0 0		
PUMP ID	883	BRAVO 4.0
TANK	0	2 KG GREASE
POWER SUPPLY	0	12 Vdc MANUAL
CONNECTIONS	00	1X DIN 43650 1X M12
CODING SEPARATOR	-	-
PUMPING ELEMENT OUTLET 1 (LEFT)	1	0.14 CC / REV.
PUMPING ELEMENT OUTLET 2 (FRONT)	2	ADJ. 0.02 - 0.13 CC / REV.
PUMPING ELEMENT OUTLET 3 (RIGHT) WITH PRESSURE RELIEF VALVE	L	0.19 CC / REV. 280 BAR
CUSTOMISED LABEL	0	DROPSA
OPTICAL LEVEL	0	NOT PRESENT N / P

ACCESSORIES

CODE	DESCRIPTION
0010509	SELF-TAPPING SCREW FOR MOUNTING SMP METERING DEVICES UP TO 12 OUTLETS AND SMPM METERING DEVICES UP TO 16 OUTLETS
3140874	MOUNTING KIT FOR SMP METERING DEVICES WITH 14, 16, OR 18 OUTLETS AND SMPM METERING DEVICES WITH 18 OUTLETS
3134209	GREASE FILLING CARTRIDGE KIT
3234406	GREASE FILLING FITTING
0039999	M12 CONNECTOR, 90°, WITHOUT CABLE
0039169	M12 STRAIGHT CONNECTOR, WITHOUT CABLE
3084761	M5 Ø6 STRAIGHT PUSH-IN FITTING (BYPASS CONNECTION)
0888969	PRESSURE RELIEF VALVE WITH GREASE NIPPLE, 280 BAR, LEFT SIDE
0888970	PRESSURE RELIEF VALVE WITH GREASE NIPPLE, 350 BAR, LEFT SIDE
0888991	PRESSURE RELIEF VALVE WITH GREASE NIPPLE, 280 BAR, RIGHT SIDE
0888992	PRESSURE RELIEF VALVE WITH GREASE NIPPLE, 350 BAR, RIGHT SIDE
0888989	PRESSURE RELIEF VALVE, 280 BAR
0888990	PRESSURE RELIEF VALVE, 350 BAR
0093660	1/4" NIPPLE FOR PRESSURE RELIEF VALVE
3134207-A00	BRAVO4 LEVEL KIT – IO/LINK
3134207-100	BRAVO4 LEVEL KIT – 4 KG FOLLOWER PLATE, PNP
3134207-200	BRAVO4 LEVEL KIT – 6 KG FOLLOWER PLATE, PNP
3134207-300	BRAVO4 LEVEL KIT – 10 KG FOLLOWER PLATE, PNP
3134207-400	BRAVO4 LEVEL KIT – 14 KG FOLLOWER PLATE, PNP
3134207-500	BRAVO4 LEVEL KIT – 2 KG STIRRING DEVICE, PNP
3134207-600	BRAVO4 LEVEL KIT – 4 KG STIRRING DEVICE, PNP
3134207-700	BRAVO4 LEVEL KIT – 8 KG STIRRING DEVICE, PNP
3134207-800	BRAVO4 LEVEL KIT – 12 KG STIRRING DEVICE, PNP
3237112	90° FILLING FITTING
0040742	10 M PUMP CABLE, 4 × 1 MM², WITH 7-PIN BAYONET CONNECTOR
0040743	10 M PUMP CABLE, 7 × 1 MM², WITH 7-PIN BAYONET CONNECTOR
0040744	5 M PUMP CABLE, 4 × 1 MM², WITH 7-PIN BAYONET CONNECTOR
0040745	5 M PUMP CABLE, 7 × 1 MM², WITH 7-PIN BAYONET CONNECTOR
0039815	5 M CABLE WITH 90° M12 CONNECTOR
0039976	MPM CONNECTOR, DIN 43650

SPARE PARTS	
CODE	**DESCRIPTION**
3130540	GREASE NIPPLE FILTER
1639314C	ELECTRONIC CONTROL BOARD (FOR PUMPS MANUFACTURED BEFORE MARCH 2026)
1639349C	ELECTRONIC CONTROL BOARD (FOR PUMPS MANUFACTURED FROM MARCH 2026 ONWARDS)
0880201	BRAVO4 STIRRING DEVICE ASSEMBLY – 2 KG
0880202	BRAVO4 STIRRING DEVICE ASSEMBLY – 4 KG
0880203	BRAVO4 STIRRING DEVICE ASSEMBLY – 6 KG
0880110	BRAVO4 PRESSING STIRRING DEVICE ASSEMBLY
0880204	GREASE BREAKER ASSEMBLY – 2 KG
0880190	GREASE BREAKER ASSEMBLY – 4 KG
0880189	GREASE BREAKER ASSEMBLY – 6 KG
0880211	GREASE BREAKER ASSEMBLY – 10 KG
0880210	GREASE BREAKER ASSEMBLY – 14 KG
0966031	PLUG FOR QUICK COUPLING 0966030
3234156	PLAIN PLUG FOR 1/4" BSP HOLE

PUMP ELEMENTS	
CODE	**DESCRIZIONE**
0888156	PUMP ELEMENT 0.14 CC / REV.
0880104	PUMP ELEMENT 0.19 CC / REV.
0888555	ADJUSTABLE PUMP ELEMENT 0.02 - 0.13 CC / REV.
0880060	ADJUSTABLE PUMP ELEMENT 0.03 - 0.2 CC / REV.
0888976	ADJUSTABLE PUMP ELEMENT 0.02 ÷ 0.13 CC / REV. + BYPASS 280 BAR
0888977	ADJUSTABLE PUMP ELEMENT 0.02 ÷ 0.13 CC / REV. + BYPASS 350 BAR
0888979	ADJUSTABLE PUMP ELEMENT 0.03 ÷ 0.2 CC / REV. + BYPASS 280 BAR
0888980	ADJUSTABLE PUMP ELEMENT 0.03 ÷ 0.2 CC / REV. + BYPASS 350 BAR