Characteristics

- **Temperature range:**
  -30degC to +80degC
- **Frequency:**
  100 cycles/minute.
- **Max. pressure (inlet):**
  400 bar
- **Lubricant:**
  Min Viscosity: 100 cSt
  Grease Max.: NLGI 2
  265 ASTM
- **Base threads:**
  Inlets:
  3/8" BSP or
  3/8" NPTF.
  Outlets:
  1/4" BSP or
  1/4" NPTF.
- **ATEX** CE Ex II2 GD Marking

Applications

- **Paper Machines**
- **Steel Plants**
- **Cement Works**
- **Coke Plant**
- **Large Cranes and Loading Equipment**

Modular Dual Line

Dual Line Lubrication Divider Valves Series 02

The modular Dual Line system consists of two main parts: the Base and the Metering Valves.
All Modular dual Line Elements and bases are made in nickel Plating.

The Nickel plating adopted by Dropsa is up to 70 times more resistant to corrosion in the field than the previous Zinc Plating and are available with inlets and outlets in UNI-ISO 7/1 (BSP) or NPTF threads.

The Metering Valves can be supplied with adjustable or fixed discharge.
The Valves with adjustable discharge are fitted with turrets provided with integral adjusting screws together with a metacrylate cover and seal.

A blanking plate to be ordered separately, can be provided on the Base to accommodate future additional points.

The Dual line elements now marked with a new laser marking system directly on the Nickel Plated element indicate the following information :

- ATEX CE Ex II2 GD Marking
- Single and Dual Outlet configuration information and Output values in cm3 and Cu.inch
- Part Number and Work Order Production (batch) identification.

The advantages of the Modular Dual Line System are:

- **Versatility in lubrication layout planning.**
- **Flexibility to expand or reduce the number of elements to meet changing requirements.**
- **Reduced spare parts, fewer parts in stock = lower inventory costs.**
- **Blanking plates can be provided to accommodate future requirements.**
- **Save on labour and piping costs; the Metering Valves can be serviced without disturbing the assembly or existing pipework.**
- **Lower maintenance costs; the modular concept provides lower cost replacement components.**

INSTALLATION/OPERATION:
The Base: A modular base is made up of a minimum of three elements: inlet; intermediate and end.

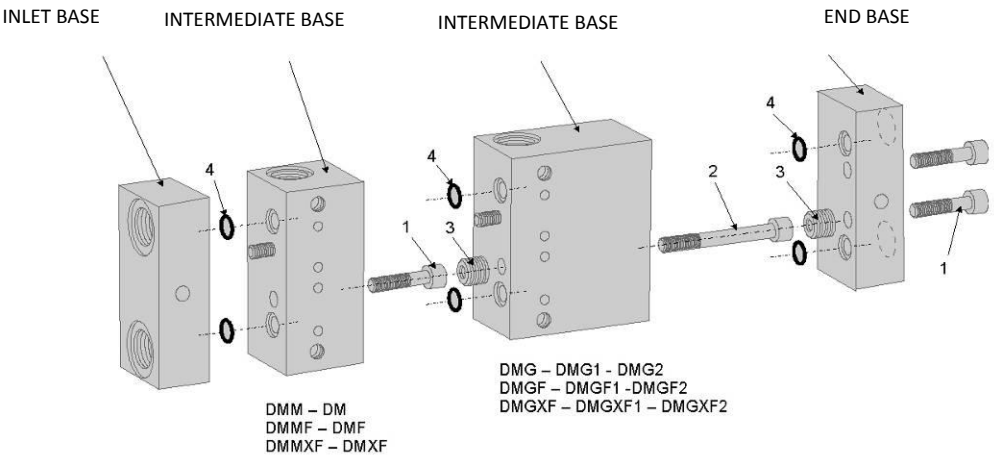

Key to Base Part Numbers:

Item	Description	Part No.	
		Nickel	St.Steel.
1	Screw	**14090**	**675231**
2	Screw	**14095**	**675238**
3	Thread insert	**1523343**	**675217**
4	'O' Ring (Viton)	**18880**	**18880**
5	Plug BSP	**926001**	**519061**
5	Plug NPTF	**850304**	**519071**
6	Check valve BSP	**92313**	**519900**
6	Check valve NPTF	**92340**	**519901**
7	Plug BSP Plug NPTF	**926002** **850305**	**519062** **519072**
8	Tube Ø10 - Ø12 - Ø16		
9	Nut Ø10 Ø12 Ø16	**91406** **91411** **91416**	**519045** **519046** **519048**
10	Ring Ø10 Ø12 Ø16	**91601** **91607** **91612**	**519015** **519016** **519018**
11	Conn'tr steel Ø10 Ø12 Ø16 Conn'tr viton Ø10 Ø12 Ø16	**91967** **91975** **91983** **91652** **91653** **91664**	**519115** **519116** **519127** **519142** **519143** **519154**
13	Nut Ø6 Ø8 Ø10	**91396** **91401** **91406**	**519043** **519044** **519045**
14	Ring Ø6 Ø8 Ø10	**91590** **91596** **91601**	**519013** **519014** **519015**
15	Conn'tr steel Ø06 Ø08 Ø10 Conn'tr viton Ø06 Ø08 Ø10	**91952** **91959** **91966** **91650** **91651** **91660**	**519113** **519114** **519123** **519140** **519141** **519150**

Base	BSP	NPTF
Inlet (zinc)	**675311**	**675321**
Intermediate (zinc) for valve: **DMM-DM-DMMF-DMF**	**675312**	**675322**
DMG-DMG1-DMG1-DMGF-DMGF1-DMGF2	**675314**	**675324**
End (zinc)	**675313**	**675323**
Inlet (stainless)	**675011**	**675071**
Intermediate (stainless) for valve: **DMMX-DMX-DMMXF-DMXF**	**675012**	**675072**
DMGX1-DMGX2-DMGXF-DMGXF1-DMGXF2 - DMGX	**675014**	**675074**
End (stainless)	**675013**	**675073**

Each element is made of nickel or stainless steel and is available with UNI-ISO 7/1 (BSP-DIN) or NPTF threads.
This concept can be extended to include up to 20 or more sections in a common assembly and eliminate the need for costly pipe and tubing connections.
The Base specified will accommodate its specific Metering Valves.

Metering Valves:

Metering Valves (adjustable)		
Discharge cu.in. (cm^3)	Nickel plated	
	Part No.	Mark
.006 - .061 (0,1 – 1)	**675335**	DMM
.015 - .183 (0,25 – 3)	**675300**	DM
.031 – 1.46 (0,5 – 24)	**675310**	DMG
.031 – 2.44 (0,5 – 40)	**675320**	DMG1
2.98 – 5.36 (49 – 88)	**675330**	DMG2
Blanking Plate	**675305**	DBP

Metering Valves (adjustable)		
Discharge cu.in. (cm^3)	St.Steel	
	Part No.	Mark
.006 - .061 (0,1 – 1)	**675635**	**DMMX**
.015 - .183 (0,25 – 3)	**675600**	**DMX**
.031 – 1.46 (0,5 – 24)	**675610**	**DMGX**
.031 – 2.44 (0,5 – 40)	**675620**	**DMGX1**
2.98 – 5.36 (49 – 88)	**675630**	**DMGX2**
Blanking Plate	**675605**	**DBPX**

Metering Valves (fixed)		
Discharge cu.in. (cm^3)	Nickel plated	
	Part No.	Mark
.061 (1)	**675385**	DMMF
.183 (3)	**675301**	DMF
Blanking Plate	**675305**	DBP

Metering Valves (fixed)		
Discharge cu.in. (cm^3)	St.Steel	
	Part No.	Mark
.061 (1)	**675685**	DMMXF
.183 (3)	**675601**	DMXF
1.46 (24)	**675615**	DMGXF
Blanking Plate	**675605**	DPBX

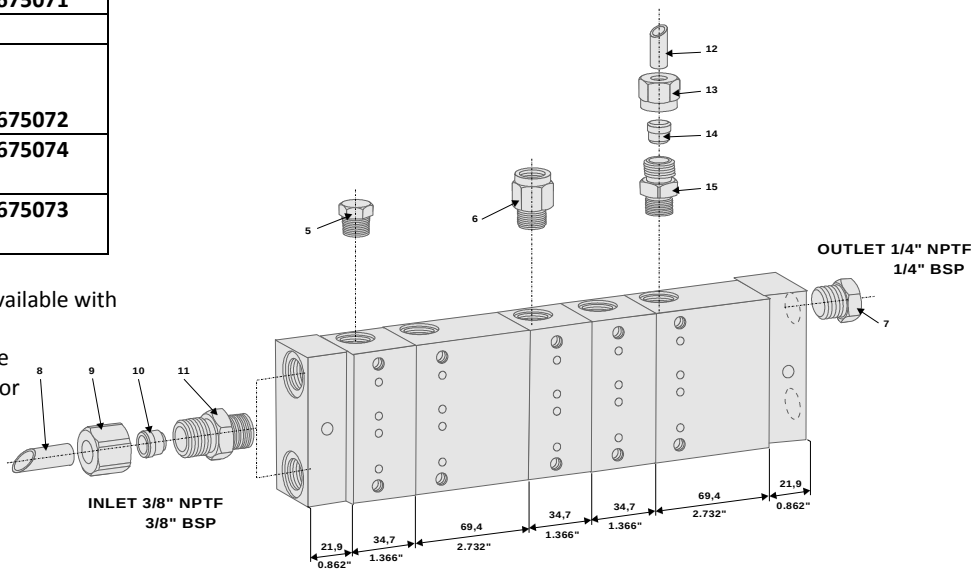

Turret cover:

Turret cover.		
Part No.	Material	Mark
622207	Transparent	DMM
622210	Alluminium	DMMX
671028	Transparent	DM-DMX
675524	Transparent	DMG-DMGX
675525	Transparent	DMG1-DMGX1 DMG2-DMGX2

Base for valves	Value
DMM-DM-DMMF-DMF-DMMX-DMMXF-DMX-DMXF	**34,7 mm. (1.366 in.)**
DMG-DMGF-DMG1-DMGF1-DMG2-DMGF2-DMGX-DMGFX-DMGX1-DMGXF1-DMGX2-DMGXF2	**69,4 mm. (2.732 in.)**

Dimensions:

(Values in parenthesis are for fixed discharge).
Dimension 'A' is obtained by adding to the dimensions of the Base Inlet and Base End 43,8 mm. (1.725") the following values for each Intermediate Base

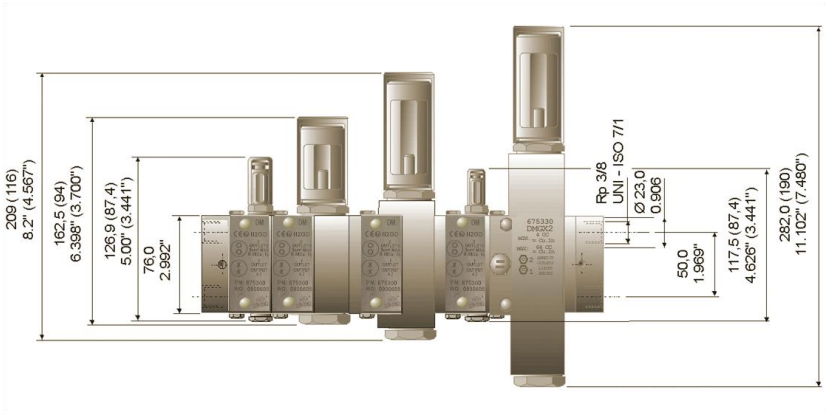

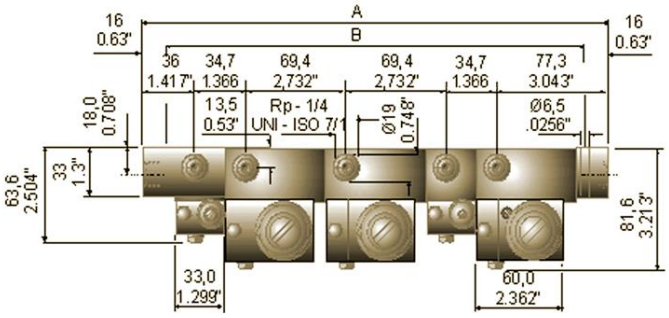

Many possible configurations can be achieved by mounting different types of intermediate bases.

The example below shows a typical configuration. You can obtain A and B Dimensions by adding up the various dimensions of each type of base.

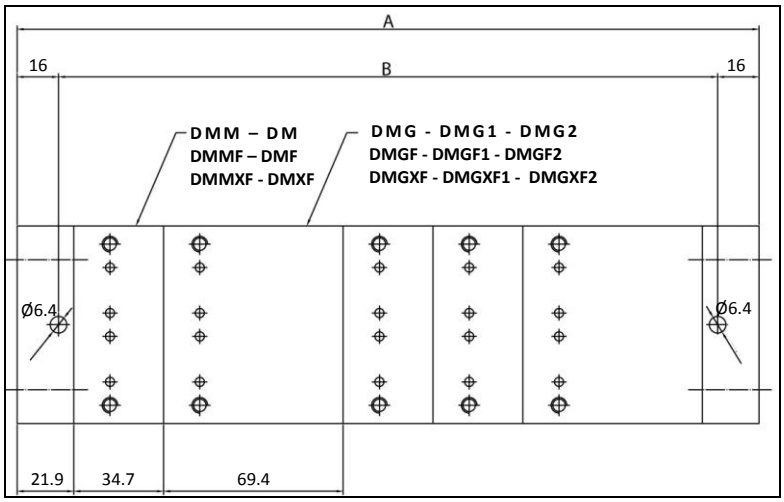

A	B
286.7 mm	**254.7 mm**
DMG - DMG1 - DMG2 DMGF - DMGF1 - DMGF2 DMGXF - DMGXF1 - DMGXF2	**DMM – DM DMMF – DMF DMMXF - DMXF**
69.4 mm	**34.7 mm**

Contacts

www.dropsa.com
sales@dropsa.com

ITALIA
Dropsa SpA
t. +39 02-250791
f.+39 02-25079767

U.K.
Dropsa (UK) Ltd
t. +44 (0)1784-431177
f. +44 (0)1784-438598

GERMANY
Dropsa GmbH
t. +49 (0)211-394-011
f. +49 (0)211-394-013

FRANCE
Dropsa Ame
t. +33 (0)1-3993-0033
f. +33 (0)1-3986-2636

CHINA
Dropsa Lubrication Systems (Shanghai) Co.,Ltd
t. +86 (021) 67740275
f. +86 (021) 67740205

U.S.A.
Dropsa Corporation
t. +1 586-566-1540
f. +1 586-566-1541

AUSTRALIA
Dropsa Australia Ltd.
t. +61 (0)2-9938-600644
f. +61 (0)2-9938-6611

BRAZIL
Dropsa
t. +55 (0)11-563-10007
f. +55 (0)11-563-19408

C1081PE WK 17/09

Modular Dual Line

TECHNICAL CHARACTERISTICS	
Temperature range:	-30oC to +80oC
Frequency:	100 cycles/minute.
Max. pressure (inlet):	400 bar
Lubricant:	**Min Viscosity:**100 cSt **Grease Max.:** 265 ASTM (NLGI 2)*. (*) For different type of grease please contact your supplier
Base threads:	**Inlets:** 3/8" BSP or 3/8" NPTF. **Outlets:** ¼" BSP or ¼" NPTF.

Spares:

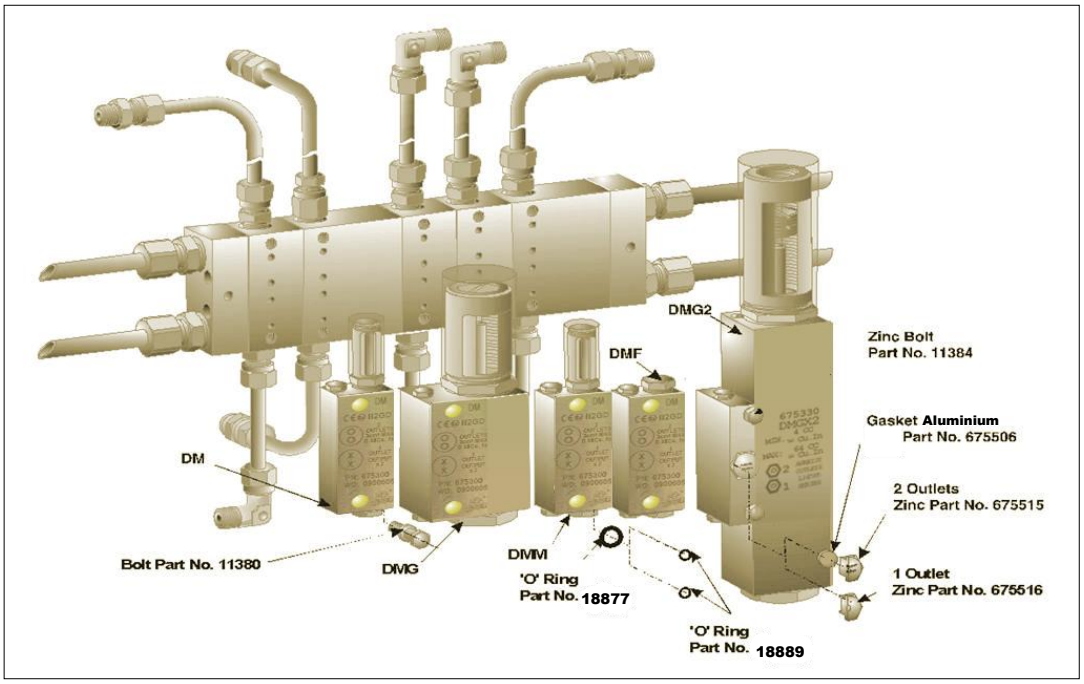

Order Information

Refer to the following ordering menu:

ORDERING MENU

NPT
BSP-DIN

SEALS
V VITON (Std.)
S SILICONE

OUTLETS
T= Twin Outlets
S= Single Outlets

OPTIONS
E - Microswitch S.P.D.T.
A - Aluminium Cover
C – Clear Cover (standard)

BASIC FEATURES

NICKEL	
SB01	SB07
SB02	SB08
SB03	SB09
SB04	SB10
SB05	SB11
SB06	SB12
STAINLESS	
SB01X	SB07X
SB02X	SB08X
SB03X	SB09X
SB04X	SB10X
SB05X	SB11X
SB06X	SB12X

METERING ELEMENTS

NICKEL	
ADJUSTABLE	FIXED
DMM	DMMF
DM	DMF
DMG	DMGF
DMG1	DMG1F
DMG2	DMG2F
STAINLESS	
ADJUSTABLE	FIXED
DMMX	DMMXF
DMX	DMXF
DMGX	DMGXF
DMGX1	DMGXF1
DMGX2	DMGXF2